# BBM105: Chapter 4
# Binary Numbers, Boolean Logic, and Gates

Slides From: Invitation to Computer Science, C++ Version

# Objectives

In this course, you will learn about:

- The binary numbering system
- Boolean logic and gates
- Circuits

# The Binary Numbering System

- A computer's internal storage techniques are different from the way people represent information in daily lives

- Information inside a digital computer is stored as a collection of **binary data**

# Binary Representation of Numeric and Textual Information

- Binary numbering system
  - Base-2
  - Built from ones and zeros
  - Each position is a power of 2

    $1101 = 1 \times 2^3 + 1 \times 2^2 + 0 \times 2^1 + 1 \times 2^0$
- Decimal numbering system
  - Base-10
  - Each position is a power of 10

    $3052 = 3 \times 10^3 + 0 \times 10^2 + 5 \times 10^1 + 2 \times 10^0$

# Binary Representation of Numeric and Textual Information (continued)

- Representing integers
  - Decimal integers are converted to binary integers
  - Given k bits, the largest unsigned integer is $2^k - 1$

    Given 4 bits, the largest is $2^4 – 1 = 15$

    Given 16 bits, 1111111111111111 = $2^{16} – 1 = 65{,}536 – 1$

    Given 3 bits, 111 = $2^3 – 1 = 7$

# Binary Representation of Numeric and Textual Information (continued)

- Signed integers must also represent the sign (positive or negative) - ***Sign/Magnitude notation***
  - **0**000 = +0  Given 4 bits, $2^3 - 1 = 7$
  - 0001 = +1
  - 0010 = +2
  - ...
  - **1**000 = -0
  - 1001 = -1
  - 1111 = -7

# Binary Representation of Numeric and Textual Information (continued)

- Signed integers must also represent the sign (positive or negative) – ***Two's Complement!!***
  - Convert Decimal to Two's Complement (to 4 bit)
    - e.g. We have 6 and -6 decimal numbers.
    - For 6 → 0110. It's ok for positive numbers!
    - For -6 → we have positive 0110.
      - In 2nd step, invert all the bits 0110 → 1001
      - In 3rd step, add 1 to 1001 → 1010. Now we have -6!
      - For -7, 0111, in 2nd step: 1000, in 3rd step: 1001

# Binary Representation of Numeric and Textual Information (continued)

- Signed integers must also represent the sign (positive or negative) – ***Two's Complement!!***
  - Convert Two's Complement to Decimal (to 4 bit)
    - e.g. We have 0110 and 1010 decimal numbers.
    - For 0110 → First bit is 0. So this is a positive number!
      - 0110 = 0x2^3 + 1x 2^2 + 1x2^1+0x2^0 = 6
    - For 1010 → First bit is 1. So this is a negative number!
      - Invert all bits again 1010 → 0101
      - Add 1 to the results 0101 + 1 → 0110
      - 0110 = 0x2^3 + 1x 2^2 + 1x2^1+0x2^0 = 6
      - The number was negative, because of first bit! = -6

# Binary Representation of Numeric and Textual Information (continued)

- Characters are mapped into binary numbers
  - ASCII code set
    - 8 bits per character; 256 character codes
  - UNICODE code set
    - 16 bits per character; 65,536 character codes
- Text strings are sequences of characters in some encoding : abcdsykfşdsf

# *Binary Representation of Textual Information (cont'd)*

ASCII
8 bits long

| Decimal | Binary | Val. |
|---|---|---|
| 48 | 00110000 | 0 |
| 49 | 00110001 | 1 |
| 50 | 00110010 | 2 |
| 51 | 00110011 | 3 |
| 52 | 00110100 | 4 |
| 53 | 00110101 | 5 |
| 54 | 00110110 | 6 |
| 55 | 00110111 | 7 |
| 56 | 00111000 | 8 |
| 57 | 00111001 | 9 |
| 58 | 00111010 | : |
| 59 | 00111011 | ; |
| 60 | 00111100 | < |
| 61 | 00111101 | = |
| 62 | 00111110 | > |
| 63 | 00111111 | ? |
| 64 | 01000000 | @ |
| 65 | 01000001 | A |
| 66 | 01000010 | B |

Unicode
16 bits long

| Dec. | Unicode | Charac. |
|---|---|---|
| 0x30 | 0x0030 | [0] |
| 0x31 | 0x0031 | [1] |
| 0x32 | 0x0032 | [2] |
| 0x33 | 0x0033 | [3] |
| 0x34 | 0x0034 | [4] |
| 0x35 | 0x0035 | [5] |
| 0x36 | 0x0036 | [6] |
| 0x37 | 0x0037 | [7] |
| 0x38 | 0x0038 | [8] |
| 0x39 | 0x0039 | [9] |
| 0x3A | 0x003A | [:] |
| 0x3B | 0x003B | [;] |
| 0x3C | 0x003C | [<] |
| 0x3D | 0x003D | [=] |
| 0x3E | 0x003E | [>] |
| 0x3F | 0x003F | [?] |
| 0x40 | 0x0040 | [@] |
| 0x41 | 0x0041 | [A] |
| 0x42 | 0x0042 | [B] |

*Partial listings only!*

# Binary Representation of Images

- Representing image data
  - Images are sampled by reading color and intensity values at even intervals across the image
  - Each sampled point is a pixel
  - Image quality depends on number of bits at each pixel
  - More info: http://cat.xula.edu/tutorials/imaging/grayscale.php
  - Most color format for storing color: RGB encoding scheme

# Reliability of Binary Representation

- Electronic devices are most reliable in a bistable environment
- Bistable environment
  - Distinguishing only two electronic states
    - Current flowing or not
    - Direction of flow
- Computers are bistable: hence binary representations

# Binary Storage Devices (continued)

- Transistors
  - Solid-state switches: either permits or blocks current flow
  - A control input causes state change
  - Constructed from semiconductor

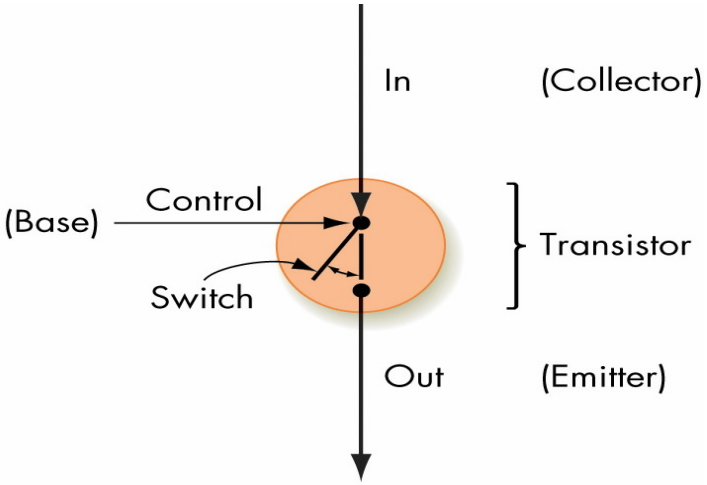

# Boolean Logic & Gates: Boolean Logic

- Boolean logic describes operations on true/false values
- True/false maps easily onto bistable environment
- Boolean logic operations on electronic signals may be built out of transistors and other electronic devices

# Boolean Logic (continued)

- Boolean operations
  - a AND b
    - True only when a is true and b is true
  - a OR b
    - True when either a is true or b is true, or both are true
  - NOT a
    - True when a is false, and vice versa

# Boolean Logic (continued)

- Boolean expressions
  - Constructed by combining together Boolean operations
    - Example: (a AND b) OR ((NOT b) AND (NOT a))
- Truth tables capture the output/value of a Boolean expression
  - A column for each input plus the output
  - A row for each combination of input values

# Boolean Logic (continued)

- Example:

  (a AND b) OR ((NOT b) and (NOT a)) =

  (1 and 0 ) or (1 and 0) = 0 or 0 = 0

| *a* | *b* | *Value* |
|---|---|---|
| 0 | 0 | 1 |
| 0 | 1 | 0 |
| 1 | 0 | 0 |
| 1 | 1 | 1 |

# Gates

- Gates
  - Hardware devices built from transistors to mimic Boolean logic
- AND gate
  - Two input lines, one output line
  - Outputs 1 when both inputs are 1

# Gates (continued)

- OR gate
  - Two input lines, one output line
  - Outputs a 1 when either input is 1
- NOT gate
  - One input line, one output line
  - Outputs a 1 when input is 0 and vice versa

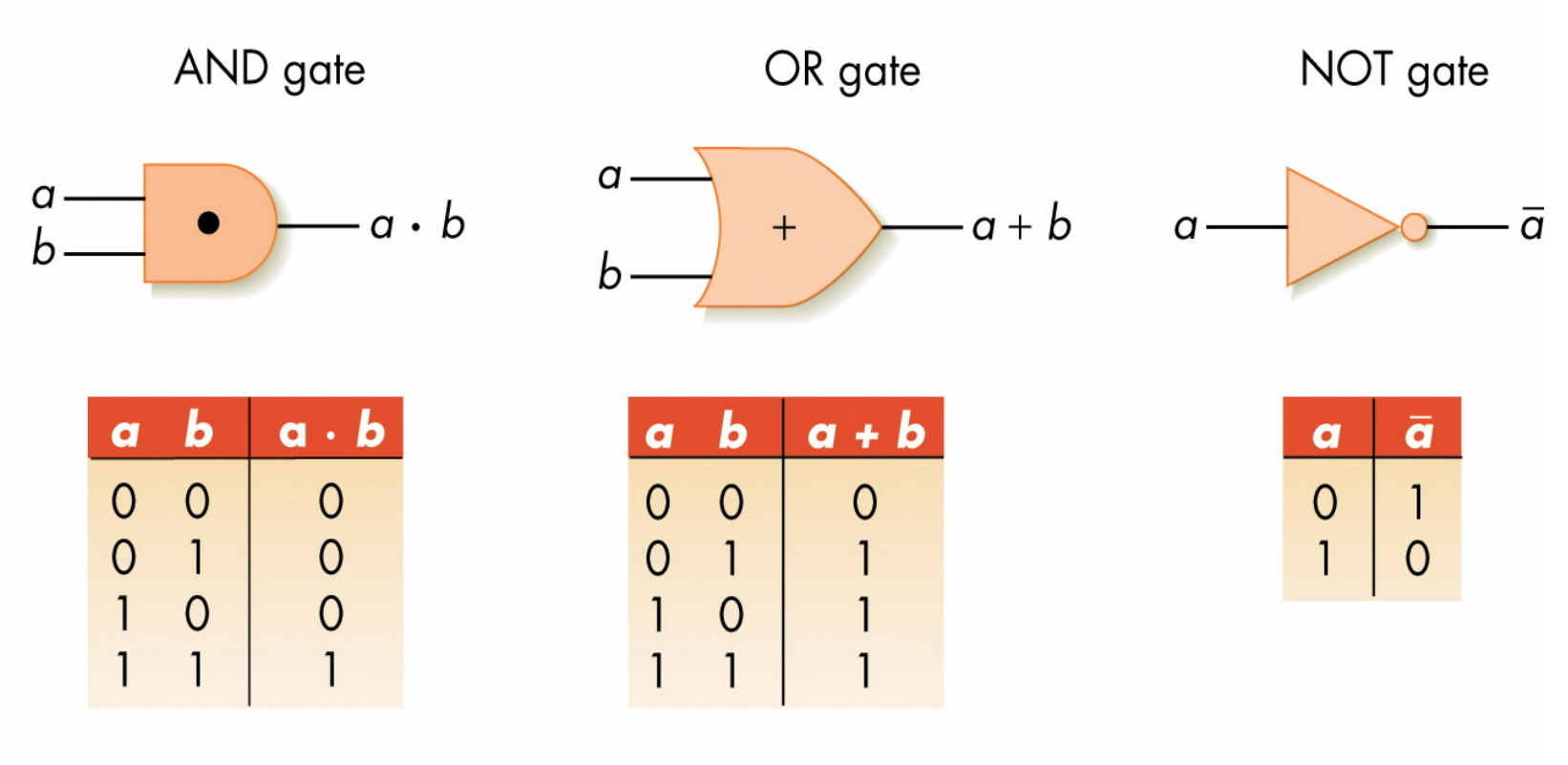


| a | b | a · b |
|---|---|---|
| 0 | 0 | 0 |
| 0 | 1 | 0 |
| 1 | 0 | 0 |
| 1 | 1 | 1 |

| a | b | a + b |
|---|---|---|
| 0 | 0 | 0 |
| 0 | 1 | 1 |
| 1 | 0 | 1 |
| 1 | 1 | 1 |

| a | ā |
|---|---|
| 0 | 1 |
| 1 | 0 |

Figure 4.15

The Three Basic Gates and Their Symbols

# Gates (continued)

- Abstraction in hardware design
  - Map hardware devices to Boolean logic
  - Design more complex devices in terms of logic, not electronics
  - Conversion from logic to hardware design may be automated

# Building Computer Circuits: Introduction

- A circuit is a collection of logic gates:
  - Transforms a set of binary inputs into a set of binary outputs
  - Values of the outputs depend only on the current values of the inputs
- Combinational circuits have no cycles in them (no outputs feed back into their own inputs)

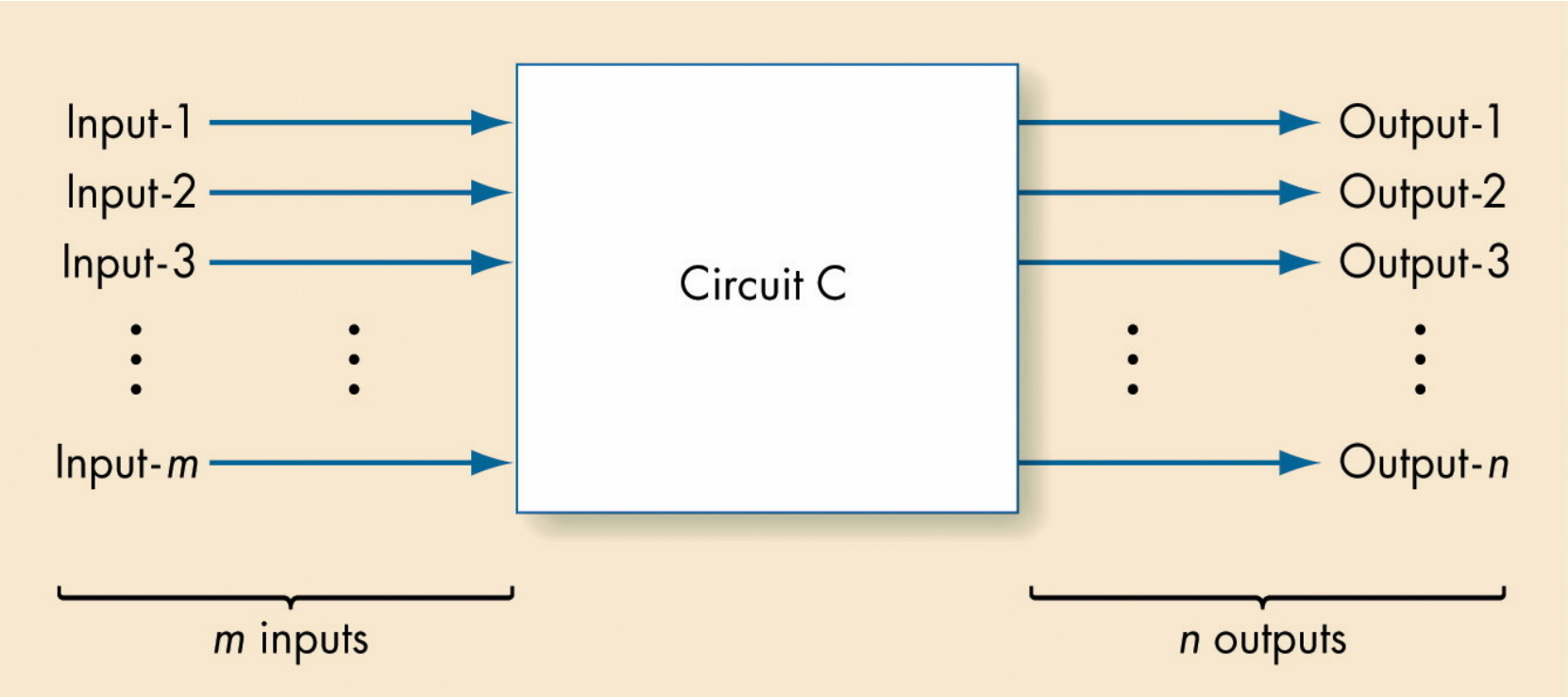


Figure 4.19
Diagram of a Typical Computer Circuit

# A Circuit Construction Algorithm

- Sum-of-products algorithm is one way to design circuits:
  - Truth table to Boolean expression to gates layout

## Sum-of-Products Algorithm for Constructing Circuits

1. Construct the truth table describing the behavior of the desired circuit
2. While there is still an output column in the truth table, do steps 3 through 6
3. Select an output column
4. Subexpression construction using AND and NOT gates
5. Subexpression combination using OR gates
6. Circuit diagram production
7. Done

Figure 4.21

The Sum-of-Products Circuit Construction Algorithm

# A Circuit Construction Algorithm (continued)

- Sum-of-products algorithm
  - Truth table captures every input/output possible for circuit
  - Repeat process for each output line
    - Build a Boolean expression using AND and NOT for each 1 of the output line
    - Combine together all the expressions with ORs
    - Build circuit from whole Boolean expression

# A Compare-for-equality Circuit

- Compare-for-equality circuit
  - CE compares two unsigned binary integers for equality
  - Built by combining together 1-bit comparison circuits (1-CE)
  - Integers are equal if corresponding bits are equal (AND together 1-CD circuits for each pair of bits)

# A Compare-for-equality Circuit (continued)

- 1-CE circuit truth table

| *a* | *b* | *Output* |
|---|---|---|
| 0 | 0 | **1** |
| 0 | 1 | 0 |
| 1 | 0 | 0 |
| 1 | 1 | **1** |

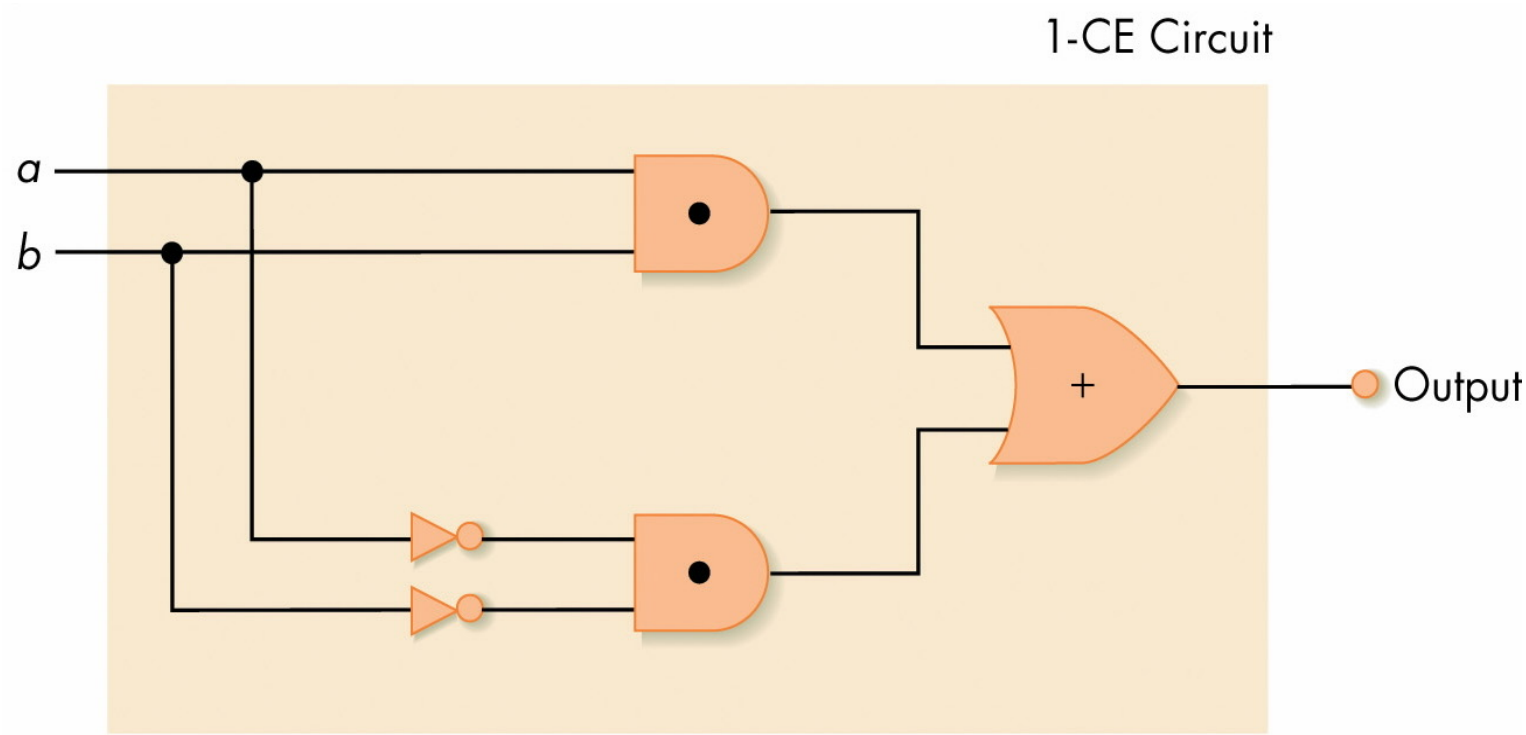


Figure 4.22

One-Bit Compare for Equality Circuit

# A Compare-for-equality Circuit (continued)

- 1-CE Boolean expression
  - <u>First case</u>: (NOT a) AND (NOT b)
  - <u>Second case</u>: a AND b
  - <u>Combined</u>:

    ((NOT a) AND (NOT b)) OR (a AND b)

# An Addition Circuit

- Addition circuit
  - Adds two unsigned binary integers, setting output bits and an overflow
  - Built from 1-bit adders (1-ADD)
  - Starting with rightmost bits, each pair produces
    - A value for that order
    - A carry bit for next place to the left

# An Addition Circuit (continued)

- 1-ADD truth table
  - Input
    - One bit from each input integer
    - One carry bit (always zero for rightmost bit)
  - Output
    - One bit for output place value
    - One “carry” bit

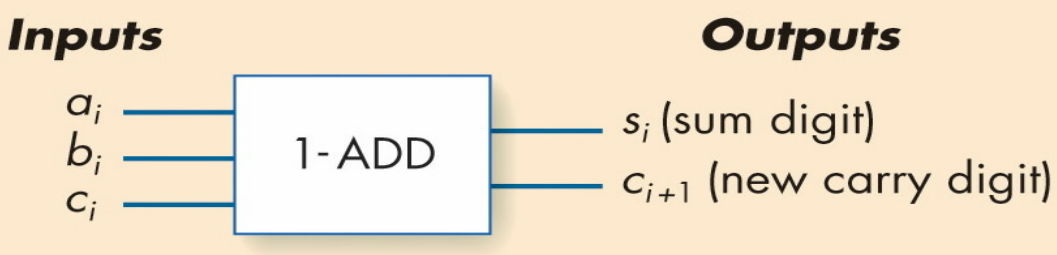


| Inputs | | | Outputs | |
|---|---|---|---|---|
| $a_i$ | $b_i$ | $c_i$ | $s_i$ | $c_{i+1}$ |
| 0 | 0 | 0 | 0 | 0 |
| 0 | 0 | 1 | 1 | 0 |
| 0 | 1 | 0 | 1 | 0 |
| 0 | 1 | 1 | 0 | 1 |
| 1 | 0 | 0 | 1 | 0 |
| 1 | 0 | 1 | 0 | 1 |
| 1 | 1 | 0 | 0 | 1 |
| 1 | 1 | 1 | 1 | 1 |

11 (carry bit)
111
111
10 (sum bit)

Figure 4.24

The 1-ADD Circuit and Truth Table

# An Addition Circuit (continued)

- Building the full adder
  - Put rightmost bits into 1-ADD, with zero for the input carry
  - Send 1-ADD's output value to output, and put its carry value as input to 1-ADD for next bits to left
  - Repeat process for all bits

# Control Circuits

- Do not perform computations
- Choose order of operations or select among data values
- Major types of controls circuits
  - Multiplexors
    - Select one of inputs to send to output
  - Decoders
    - Sends a 1 on one output line, based on what input line indicates

# Control Circuits (continued)

- Multiplexor form
  - $2^N$ regular input lines
  - N selector input lines
  - 1 output line
- Multiplexor purpose
  - Given a code number for some input, selects that input to pass along to its output
  - Used to choose the right input value to send to a computational circuit

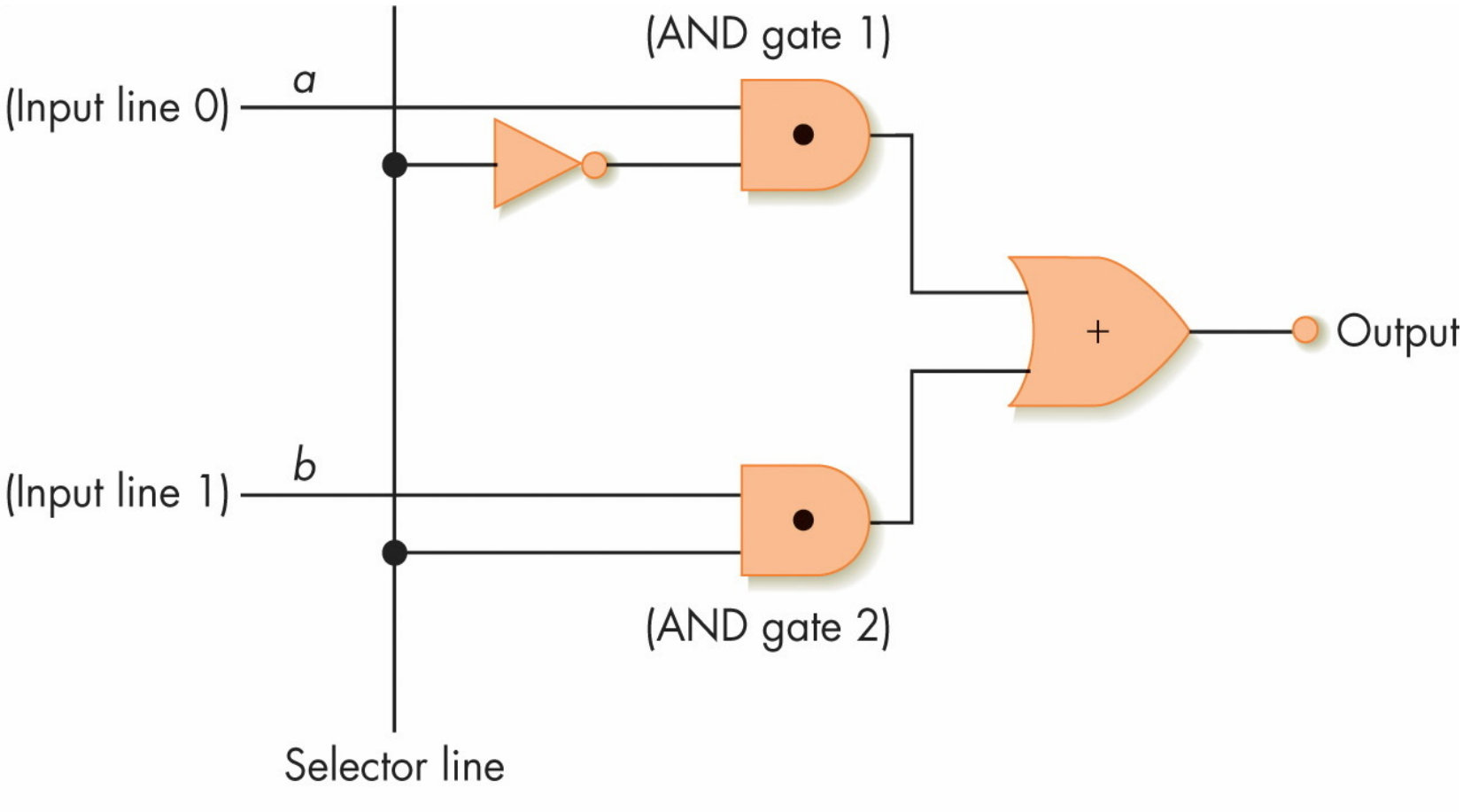


Figure 4.28
A Two-Input Multiplexor Circuit

**FIGURE 4.31**
*Example of the Use of a Multiplexor Circuit*

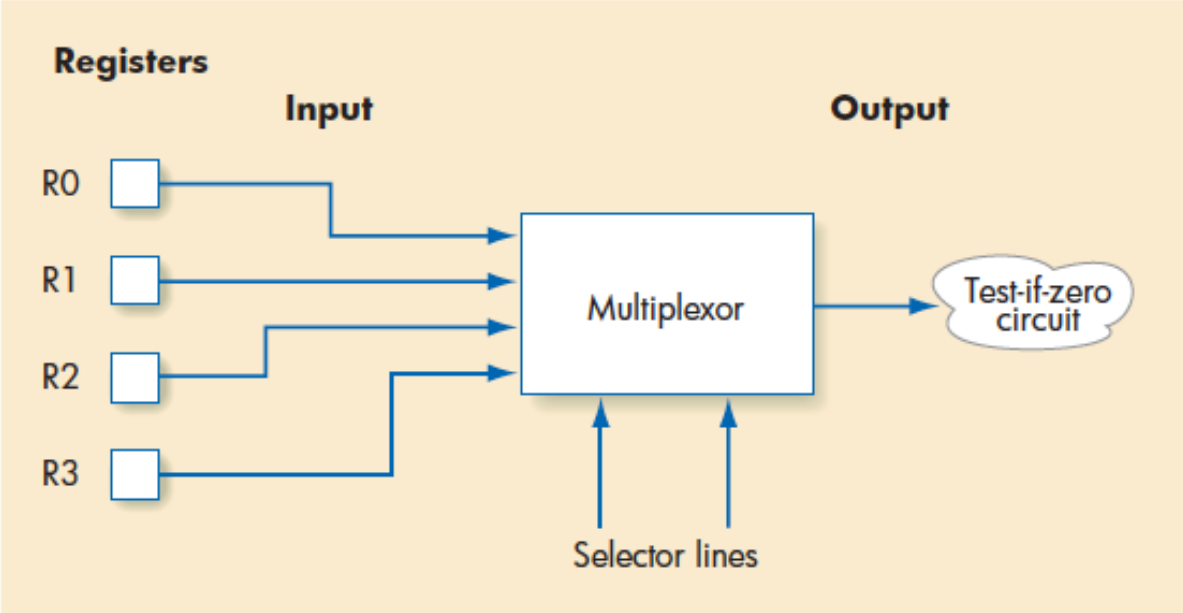

# Control Circuits (continued)

- Decoder
  - Form
    - N input lines
    - $2^N$ output lines
  - N input lines indicate a binary number, which is used to select one of the output lines
  - Selected output sends a 1, all others send 0

# Control Circuits (continued)

- Decoder purpose
  - Given a number code for some operation, trigger just that operation to take place
  - Numbers might be codes for arithmetic: add, subtract, etc.
  - Decoder signals which operation takes place next

Figure 4.29

A 2-to-4 Decoder Circuit

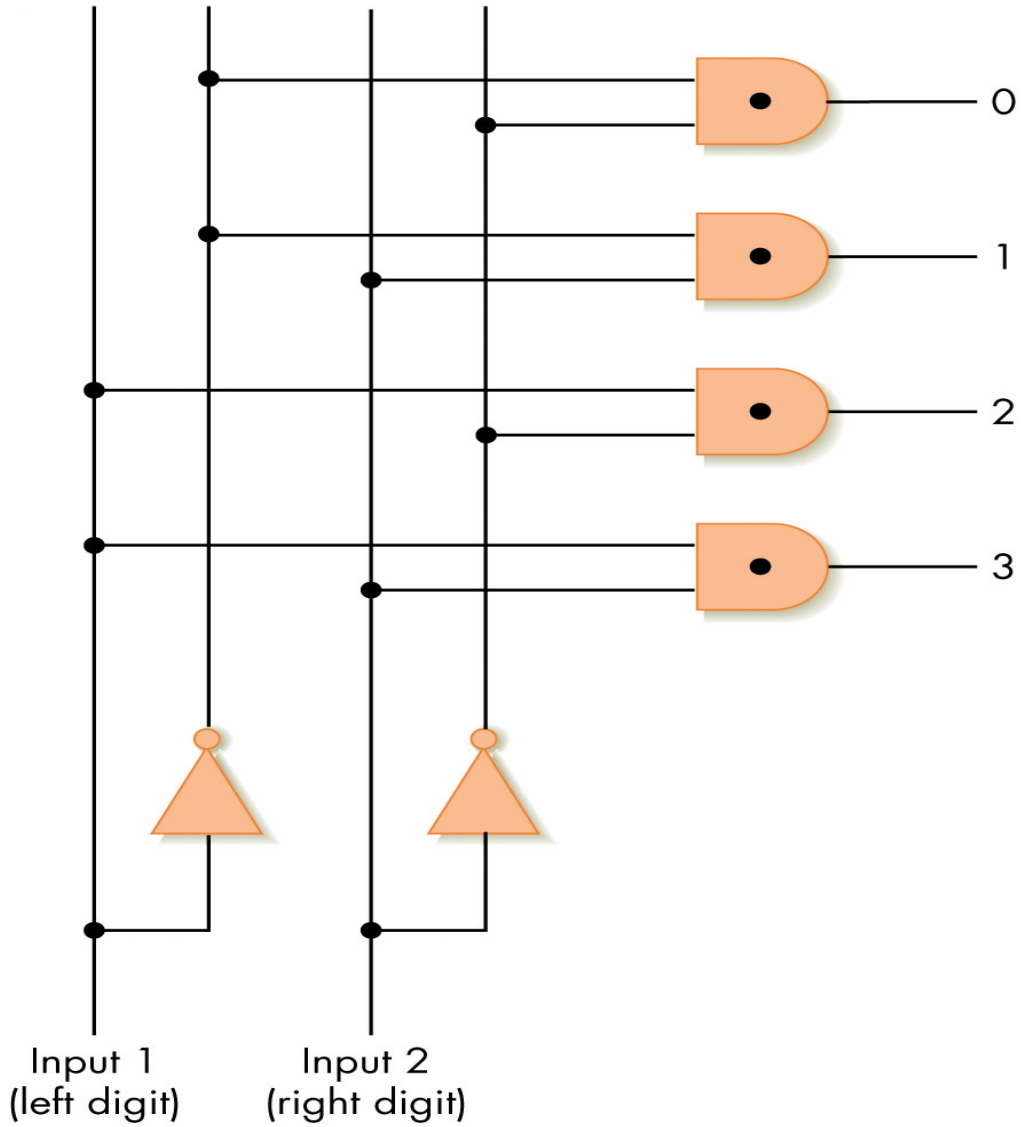

**FIGURE 4.30**
*Example of the Use of a Decoder Circuit*

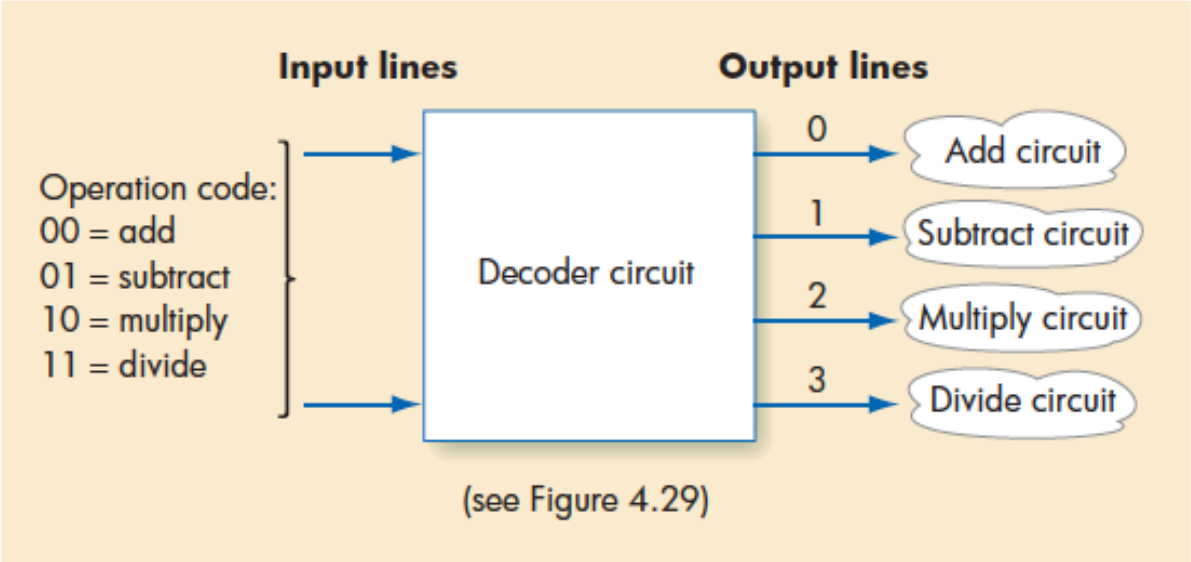

# Summary

- Digital computers use binary representations of data: numbers, text, multimedia
- Binary values create a bistable environment, making computers reliable
- Boolean logic maps easily onto electronic hardware
- Circuits are constructed using Boolean expressions as an abstraction
- Computational and control circuits may be built from Boolean gates